1) Maaz Ahmed, Professor Holt, ma69299

2) 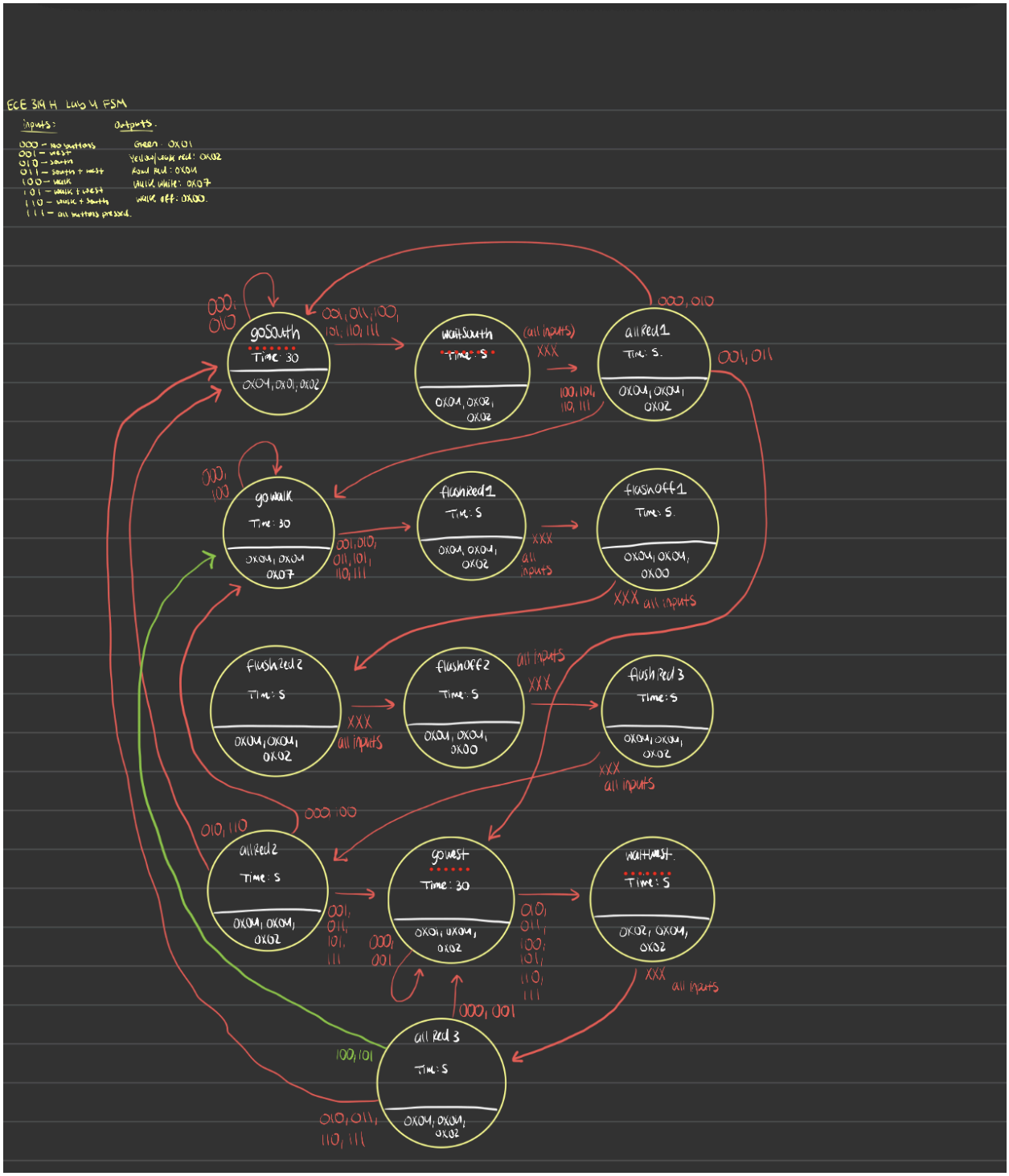

3) 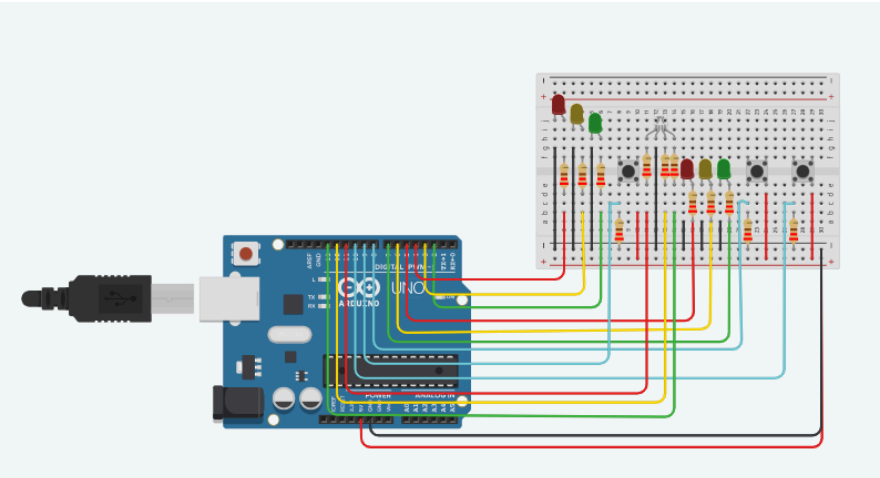

(changed the circuit physically because of messy wires)

4)

DataBuffer: 0x20200000	0x20200000
[0]: 0x00000021	0x20200000
[1]: 0x00000022	0x20200004
[2]: 0x00000024	0x20200008
[3]: 0x00000060	0x2020000C
[4]: 0x000000A0	0x20200010
[5]: 0x00000120	0x20200014
[6]: 0x04000020	0x20200018
[7]: 0x0C400020	0x2020001C
[8]: 0x00000021	0x20200020
[9]: 0x00000022	0x20200024
[10]: 0x00000024	0x20200028

5)

```
Lab 4, Spring 2026, Step 2. Debug switches
EID1= MA69299
Switch= 0x1
Switch= 0x0
Switch= 0x4
Switch= 0x0
Switch= 0x2
Switch= 0x0
```

6)

```
DataBuffer: 0x20200000
    [0]: 0x00040102
    [1]: 0x01040202
    [2]: 0x02040402
    [3]: 0x03040407
    [4]: 0x04040402
    [5]: 0x05040400
    [6]: 0x06040402
    [7]: 0x07040400
    [8]: 0x08040402
    [9]: 0x09040402
    [10]: 0x0A010402
    [11]: 0x0B020402
    [12]: 0x0C040402
```